2010 Cobb International Blvd
Suite H
Kennesaw, GA 30152
T (800) 655-5649
F (800) 655-5684
www.beccainc.com

Date: July 5, 2011

To: Whom it may concern

Re: BECCA Spray Gun Cleaners National Requirement Compliance

BECCA Spray Gun Cleaners:

- ENVIROWASH E-Series (Waterborne) &
- SOLVENT S-Series (Solvent)

meet the following requirements when installed and used properly:

1) NFPA 33 - 2011
   a. Chapter10 Section 10.7 Cleaning Operations
      10.7.1 Scope. This section shall apply to the use of flammable or combustible liquids for the flushing and cleaning of equipment.
      10.7.2 Liquids. Class I and Class II liquids used in cleaning operations shall be in original containers or in listed safety containers
      10.7.3 Location. Cleaning operations using flammable or combustible liquids shall be conducted in the spray area with ventilating equipment operating or in ventilated areas that meet the requirements of Chapter 7. Such areas shall also meet the electrical area classification requirements for 6.5.5

   b. Chapter 6 Section 6.5.5
      Open containers, supply containers, waste containers, spray gun cleaners, and solvent distillation units that contain Class I liquids shall be located in areas ventilated in accordance with applicable requirements of Chapter 7

6.5.5.2 Electrical wiring and utilization equipment installed in these areas shall be suitable for the location, as shown in Figure 6.5.5.2.

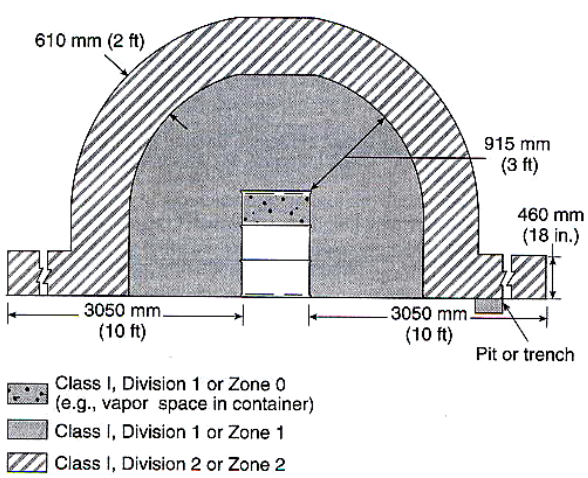

FIGURE 6.5.5.2 Electrical Area Classification for Class I Liquid Operations Around Open Containers, Supply Containers, Waste Containers, Spray Gun Cleaners, and Solvent Distillation Units.

c. Chapter 7 Ventilation Section 7.2 Performance Requirements
   Each area shall be provided with ventilation that is capable of confining and removing vapors …… The concentration of vapors of the ventilation system shall not exceed 25 percent of the lower flammable limit.

2) EPA NESHAP 6H Rule
   a. 40 CFR Part 63, Subpart HHHHHH - Refinish Area Source Rule
      4) Summery - Paint spray gun cleaning cannot create any atomized or mist of cleaning solvent to the air. You may spray solvent through the gun for cleaning purposes using an enclosed gun cleaner or you may clean the gun manually.

3) EPA Design for the Environment – This is a voluntary program and is sometimes misunderstood as a requirement. Some key points under Spray Gun Cleaning section:
   a. Would prefer the use of Automatic Spray Gun Cleaners
   b. Keep lid closed to prevent evaporation
   c. Cleaner, if exhausted, does so to the outside
   d. Gun Cleaner located in a ventilated area
   e. Painters wear appropriate respiratory protection
   f. Painters wear nitrile gloves when working with solvents

4) State and Local Jurisdiction requirements are subject to additional review.
   - BECCA cannot be held responsible for the review of all these type of requirements
   - Some requirements known:
     - Michigan - Cover doors on all spray gun cleaners
     - Pennsylvania – Cover doors on all spray gun cleaners
     - California - Cover doors on all spray gun cleaners – Mechanical Exhaust for all spray gun cleaners
     - Oregon - Cover doors on all spray gun cleaners
     - Washington - Cover doors on all spray gun cleaners

5) Local Jurisdictions are the final authority

Sincerely,

Barry Thomas

Barry Thomas
President